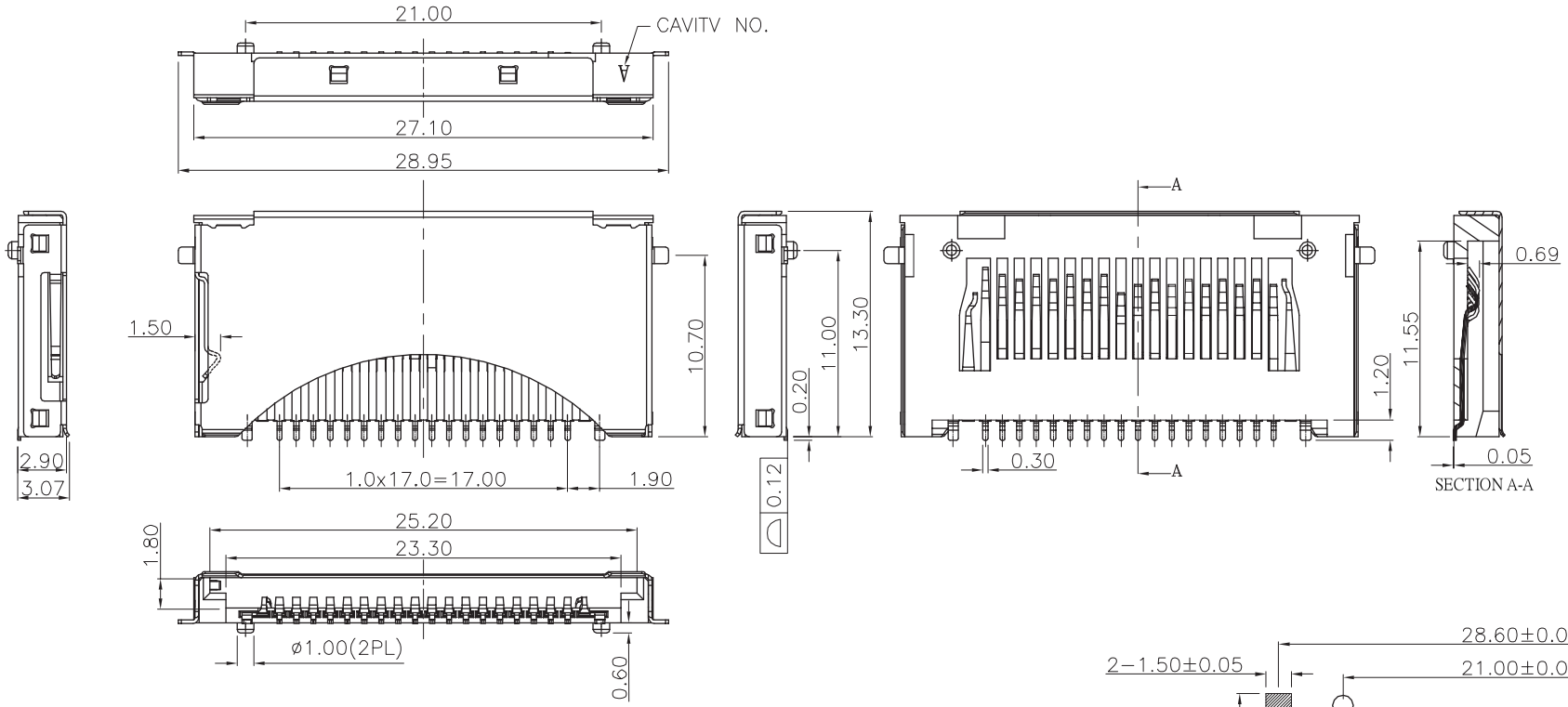

XD DEFINITION

PIN NO.	FUNCTION
1/19	GND/(CARD DETECT)
2	READY/BUSY
3	READ ENABLE
4	CARD ENABLE
5	COMMAND LATCH ENABLE
6	ADDRESS LATCH ENABLE
7	WRITE ENABLE
8	WRITE PROTECT
9	GND
10	DATA0
11	DATA1
12	DATA2
13	DATA3
14	DATA4
15	DATA5
16	DATA6
17	DATA7
18/20	VCC

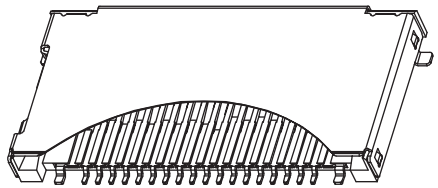

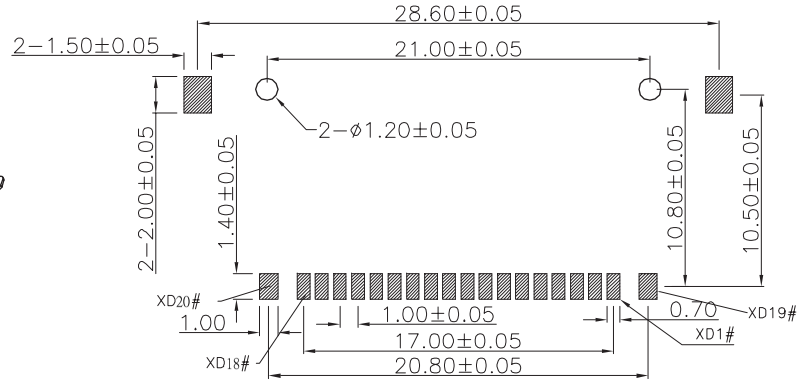

P.C.B LAYOUT

NOTE:

1.0 MECHANICAL CHARACTERISTICS

2.1 Insertion Force: 9.8 N (MAX)

2.2 Extroction Force: 1.47 N (MIN)

2.3 Mating cycle: 10000 cycles

2.0 ELECTRICAL CHARACTERISTICS

3.1 Current rating : 0.5 A

3.2 Operating voltage : 3.3V

3.3 Contact resistance: 40m ohms max.

3.4 Insulation resistance: 1000M ohms min. at 500 VDC

3.5 Dielectric withstanding voltage:250 VAC/1minute

3.6 Operating Temperature: −0°C~+55°C

3.7 Storage Temperature: −20°~+65°C

3.8 Operation/Storage humidity: 95% or less

GENERAL TOLERANCES (UNLESS SPECIFIED)	mm	INCH
4 PLACES	± ---	± ---
3 PLACES	± ---	± ---
2 PLACES	± 0.25	± ---
1 PLACE	± 0.38	± ---
ANGULAR ± 5°		

SCALE N/A | DESIGN UNITS METRIC | THIRD ANGLE PROJECTION

DRAWN BY | DATE

CHECKED BY | DATE

APPROVED BY | DATE 03/16/06'

WISE POWER TECH.CO.LTD

TITLE

XD NO PUSH CONN.

SYMBOLS MAJOR CRITICAL QUALITY ☒ = 0 ▨ = 0

REVISE ON CAD ONLY

PART NO. BS252-0001-00 | DOCUMENT NO. BS252-0001-00 | SHEET NO. 1 OF 1